PSWI-50-LA

Pure sine wave 50W micro inverter



Description

The **PSWI-50-LA** is a compact, UL 924-listed pure sine wave emergency lighting inverter delivering 50W of power for a minimum of 90 minutes. It features a $LiFePO_4$ battery, universal 120-277VAC input (50/60 Hz), advanced emergency load management, and supports remote mounting up to 1000 ft. Compatible with LED, fluorescent, and incandescent loads.

Top features

- **100% rated output -** Delivers full 100% rated output for 90 minutes during power loss, while supporting high inrush current (I^2t) and heavy start-up power demands
- **$LiFePO_4$ battery -** Long-life $LiFePO_4$ battery for enhanced reliability and durability
- **Universal voltage input -** Two-wire, universal 120-277VAC input and automatically configures output for simplified installation
- **Advanced emergency load management -** Handles up to 5x rated load (250W) in normal mode and seamlessly switches to emergency lighting when using the 0-10V dimming feature
- **Location -** UL listed for installation in damp locations and suitable for non-air handling Plenum
- **Compliance -** UL924 Listed for U.S. and Canada to CSA 22.2 No.141. Title 20 compliant. Meets or exceeds NFPA 101, NFPA 70, IBC and IFC requirements

Advanced emergency load management

0-10V DIMMING CONTROL

The **PSWI-50-LA** includes a 0-10V automatic dimming control circuit and supports up to 250W of normally powered dimmable fixtures when connected with 0-10V dimming controls. When a loss of normal power occurs, the inverter automatically adjusts the dimming level of the fixtures to keep total load within the rated capacity of 50W.

Configuration	Normal Mode	Emergency Mode
Single OR Multiple fixture(s) ≤ 50W	Full brightness	Full brightness (50W)
Multiple fixtures up to 250W	Full brightness	0-10V Auto-dim to ≤ 50W total — Inverter automatically reduces fixtures brightness to stay within 50W capacity
Dimmable LED driver required	Yes	Yes, for auto-dimming function
Switched fixtures	Supported	Supported
Unswitched fixtures	Supported	Supported

Note: Emergency fixtures that are normally off typically do not support 0-10V dimming

Electrical specifications

Input voltage	120–277VAC, 50/60 Hz (two wires)
Input power	14W max
Input power factor	> 0.9
Input current	120mA max
Inrush current	< 20 Apk
Surge immunity	6 kV ring wave and combination wave (per ANSI/IEEE C62.41.2-2002)
Output voltage	Pure sine wave 120/277VAC (auto-detection)
Output power	50W max
Output power factor	0.65 leading to 0.65 lagging
VA maximum	76.9 VA
Inverter overload capability	84.6 VA for 100 minutes
Output short circuit protection	Auto-recovery after 10 seconds
Transfer time	2 Seconds
Emergency operating run time	90 Minutes at 50W load
Supported loads	LED, fluorescent, incandescent
Remote distance (inverter to load)	1000 ft with either 12 or 14 AWG wire
Test switch distance	Up to 50 ft

 ©2026 ABB. ALL RIGHTS RESERVED.

Battery specifications

Battery Type	$LiFePO_4$
Cycle rating	≥ 2,000
Battery nominal voltage	12.8V
Battery Charge time	24 hours
Storage Time	12 months at -4 °F to 131 °F (-20 °C to 55 °C)

Mechanical specifications

DIMENSIONS AND INSTALLATION FOOTPRINT

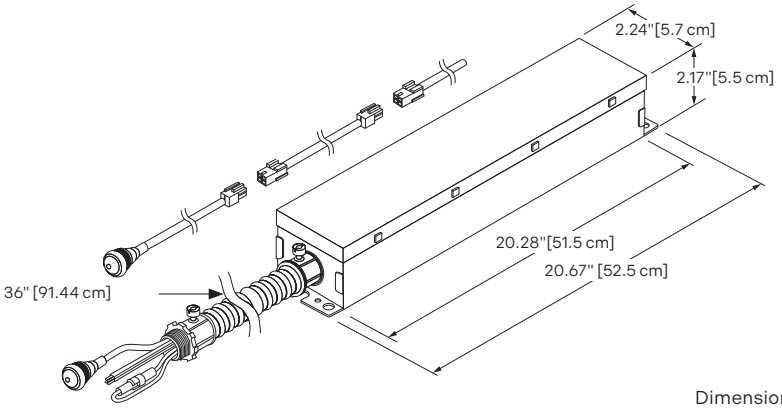

Dimensions are approximate and subject to change.

Enclosure material	Galvanized steel
Enclosure rating	IP30
Weight	5.07 lbs (2.3 Kg)
Mounting	Surface, wall, ceiling, suitable for non-air handling plenum
Operating ambient temperature	32°F to 122°F (0 °C to 50 °C)
Humidity	10% to 90%
Maximum case temperature	158°F (70 °C)
Over temperature protection	Auto shut down
Storage temperature	-4 °F to 131 °F (-20 °C to 55 °C)

Warranty & support

5-Year Limited Warranty
Complete warranty terms available at lightalarms.com/modules/Files/la_warranty.pdf

Ordering information

Series	Capacity	Brand
PSWI: Pure sine wave inverter	**-50**	**-**LA
Example: PSWI-50-LA		

Product family

Also available in different wattages. **25W:** PSWI-25-LA • **100W:** PSWI-100-LA • **250W:** PSWI-250-LA

 ©2026 ABB. ALL RIGHTS RESERVED.