Severe XVHZ

DIAGNOSTIC / SELF TEST FEATURE (STANDARD)

Diagnostic / Self Test circuitry is standard on all self-powered models. This circuitry is programmed to ensure the exit's readiness and reliability by continuously monitoring every critical function of the unit. If a problem occurs, a single "Service Required" indicator illuminates immediately. A detailed diagnostic display is located on the inside of the exit sign, out of sight from the general public. The detailed diagnostic display inside the exit sign will further indicate the nature of the fault. The self test will test the unit for the minimum 30 seconds each month, 30 minutes every 60 days and 90 minutes annually.

OPTIONS

Description	Suffix
Cold Weather (-20°C)(-4°F) (Self-Powered)	-CW
NEXUS® wired	NEX

Accessories (order as a separate item)

Tamper-Proof Bit (extra)	TBP
Convert single to double face, red*	DFKR
Convert single face to double face, green*	DFKG

**In the field*

ACCESSORIES

(order as a separate item)

Tamper-Proof Bit. **690.0454-L**

Hazardous Location Exit Sign

Class I, Division 2 Compliant Exit Sign

The **XVHZ Series** of Exit signs has been designed specifically for installation in hazardous locations and other high abuse industrial environments. Weather resistant, high impacts, vibrations and variations in temperature. The **XVHZ Series** of Exits is ideally suited for areas with the risk of presence of flammable gases, vapors or liquids able to create an explosive gas atmosphere.

Sealed Maintenance-Free Batteries
• Nickel-Cadmium

APPLICATIONS

• Manufacturing Plants, • Chemical Plants, Food Processing Areas,
• Paint Shops, • Moisture, Dirt or Dust Concerns, • Oil Refineries
• Wet or Corrosive Conditions,• Gas Stations

FEATURES

- CSA US listed for hazardous locations
- Evaluated to UL 844 standard for Class I Division 2, Groups A, B, C and D
- Evaluated to UL 924 and UL1598 standards
- Temperature Code: T6 (maximum 85°C - 185°F)
- Suitable for cold-weather: -20°C (self-powered with "CW" option) and -40°C (AC only)
- 120 to 277Vac two-wire universal AC-input
- Single face heavy-duty 1/8-inch thick aluminum back plate
- Energy Efficient: consumes less 2.5 Watts in any configuration
- Sealed faceplate constructed of heavy-duty, vandal-resistant polycarbonate
- Polyvinyl chloride frame, with built-in gasket to prevent water infiltration
- Exit sign module illuminated by long-life, energy-efficient LEDs
- Tamper-resistant, hermetically sealed magnetic test switch
- Self-test / self-diagnostic circuitry is standard on self-powered models
- Comes standard with industrial-grade, die-cast aluminum junction box
- ½ inch electrical conduit entry on both sides and at the top
- Each unit comes standard with one tamper-proof driver bit.

Reliability

The **XVHZ Series** has a 5-year full warranty.

Unit Data

Will not dent, peel, rust or corrode. The sealed faceplate is constructed of heavy duty, vandal resistant polycarbonate and features an evenly illuminated legend. The fully gasketed faceplate is fastened with stainless steel tamper-resistant screws. Magnetically operated test switch. Models can be wall or ceiling mounted. Legend and chevron complies with UL and CSA requirements. **Severe XVHZ Series** signs are unaffected by the vibrations, ambient temperature swings and typical power surges detrimental to standard exit light sources.

HIGH PERFORMANCE CIRCUITRY

- Self Contained... Batteries & circuitry located inside the exit housing.
- Battery-operated units come standard with self-testing and diagnostic circuitry.
- Fully automatic charger is solid state.
- AC, AC/DC and Self-Powered Models have universal, 2-wire input 120V to 277Vac 50/60 Hz.
- Sealed, maintenance-free Nickel-Cadmium battery provides 90 minutes of emergency operation.
- Batteries recharge per UL924 requirements.

DIMENSIONS

Dimensions are approximate and subject to change.

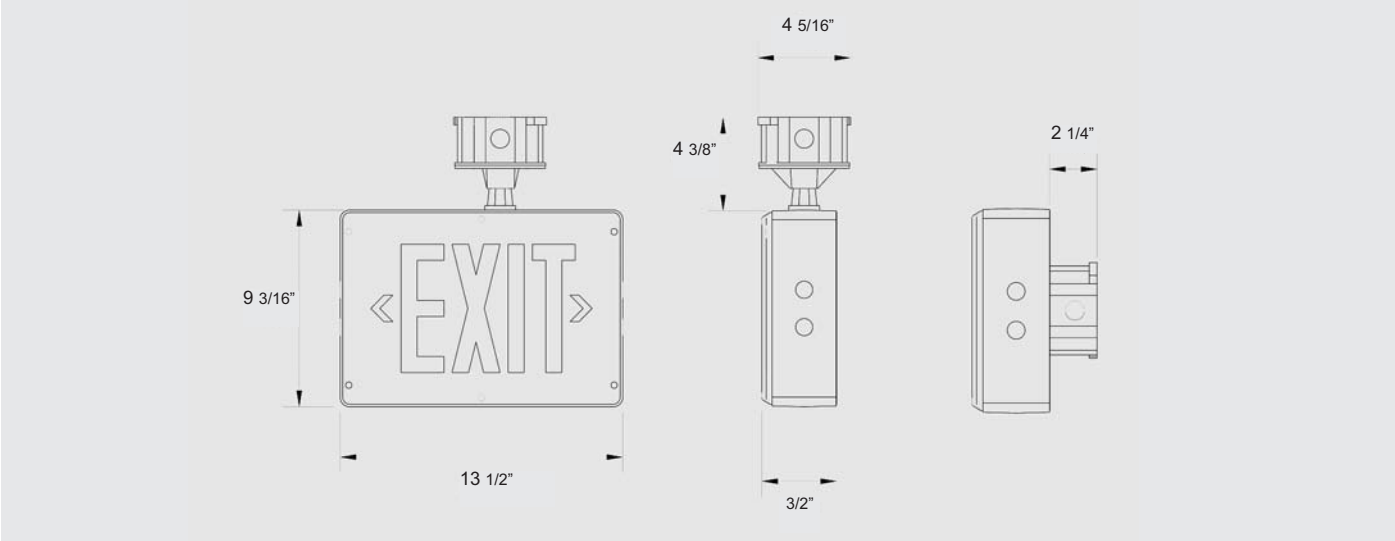

POWER CONSUMPTION

Model	AC Specs		DC Specs	
AC-only red	120 to 277Vac	Less than 2 W	-	-
AC-only green	120 to 277Vac	Less than 1.5 W	-	-
Self-powered red	120 to 277Vac	Less than 2 W	Ni-Cd battery	Min. 90 minutes
Self-powered green	120 to 277Vac	Less than 2.5 W	Ni-Cd battery	Min. 90 minutes

ORDERING FORMAT

GG	XVEHZ	-2	-R	-D	-4X	CW
Colour of Body/Face **GG**= Gray/Gray	**Series** **XVHZ**= AC only **XVEHZ**= Self-powered (NiCad)	**Face(s)** **1**= single (Ceiling/Wall Mount) **2**= double (Ceiling Mount only	**Legend** **R**= Red **G**= Green	**Diagnostic** **D**= Improved Diagnostic* **NEX**= Nexus interface* **NEX=** NEXUS® wired *self-powered only	**Housing** **4X**= Suitable for Wet Locations	**Options** **CW**= Cold weather *(-20 deg.C for self-powered, -40 deg.C for ac/dc)*